1. Scope

This document specifies the steps to insert or remove the DF62 series.

It contains general guidelines and precautions for the safe use of the product. The use of the product in a way not as specified in the document could result in unexpected troubles such as damage to connectors. Please make sure to thoroughly read and understand the document prior to the use of the product.

2. Connectors

○ Connectors

DF62 – ＊ EP – 2.2 C

❶ ❷❸ ❹ ❺

❶	Series: DF62
❷	No. of poles: 2 ~ 24 △1
❸	Connector types S : Socket EP: In-line plug
❹	Terminal pitch: 2.2 mm
❺	Shape of connection/terminal C: Crimping case

○ Terminals

DF62 – EP 2428 PCF A

❶ ❷ ❸ ❹

❶	Application EP: In-line
❷	Compatible cables 22 : AWG22 2428: AWG24 ~ 28 30 : AWG30
❸	Shape/packing SCF : Socket terminal, reeled SC : Socket terminal, separate PCF : Plug terminal, reeled PC : Plug terminal, separate
❹	Plating A : Gold plating Blank : Tin plating △1

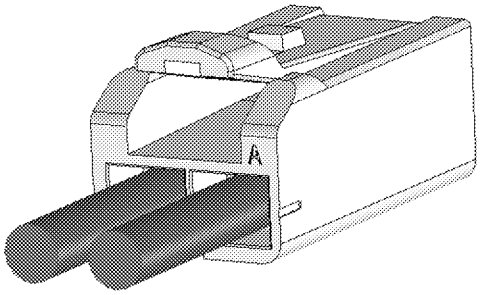

(E.g.) DF62B-2S-2.2C △1
+DF62-2428SCFA (Cables attached)

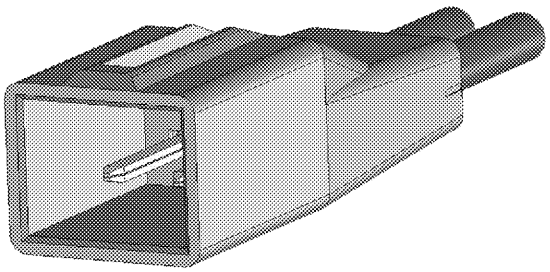

(E.g.) DF62B-2EP-2.2C △1
+DF62-EP2428PCFA (Cables attached)

	COUNT	DESCRIPTION OF REVISIONS	DESIGNED	CHECKED	DATE
△1	4	DIS-H-008108	TH.YOSHIZAWA	MN.KENJO	13.08.22

TITLE

DF62 Series Mating / Unmating Operation Instruction Manual

HRS HIROSE ELECTRIC CO.,LTD.

APPROVED	KI.AKIYAMA	13.04.23
CHECKED	HK.UMEHARA	13.04.23
DESIGNED	TS.KUMAZAWA	13.04.23
WRITTEN	TS.KUMAZAWA	13.04.23

TECHNICAL SPECIFICATION | ETAD-H0599 △1 | 1 / 4

FORM HC0011-9-1

Feb.1.2026 Copyright 2026 HIROSE ELECTRIC CO., LTD. All Rights Reserved.

3. Operation procedure

3-1. Insertion

3-1-a. Positioning for insertion:

Adjust the position for insertion according to the locks of the socket and In-line plug.

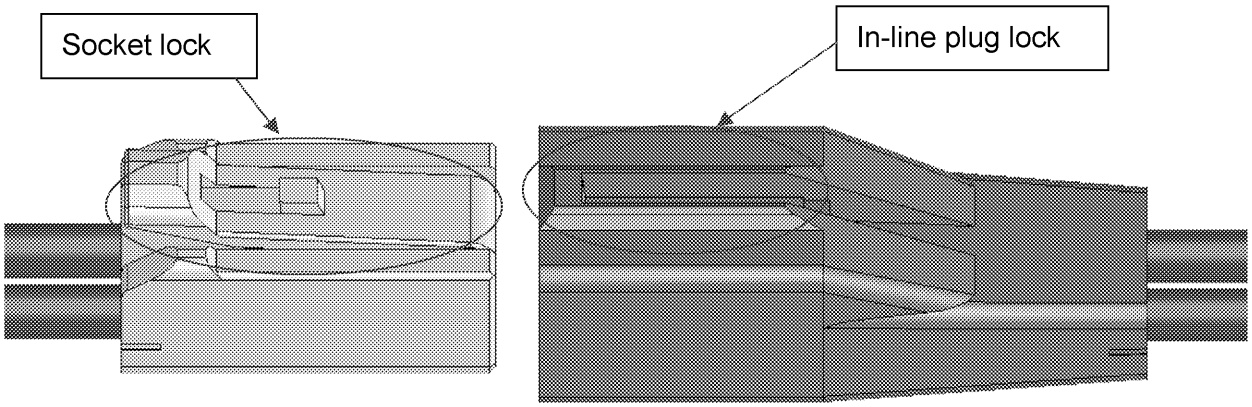

Fig.2 Positioning for insertion

3-1-b. Insertion:

Insert the socket till it clicks while retaining the adjusted position.

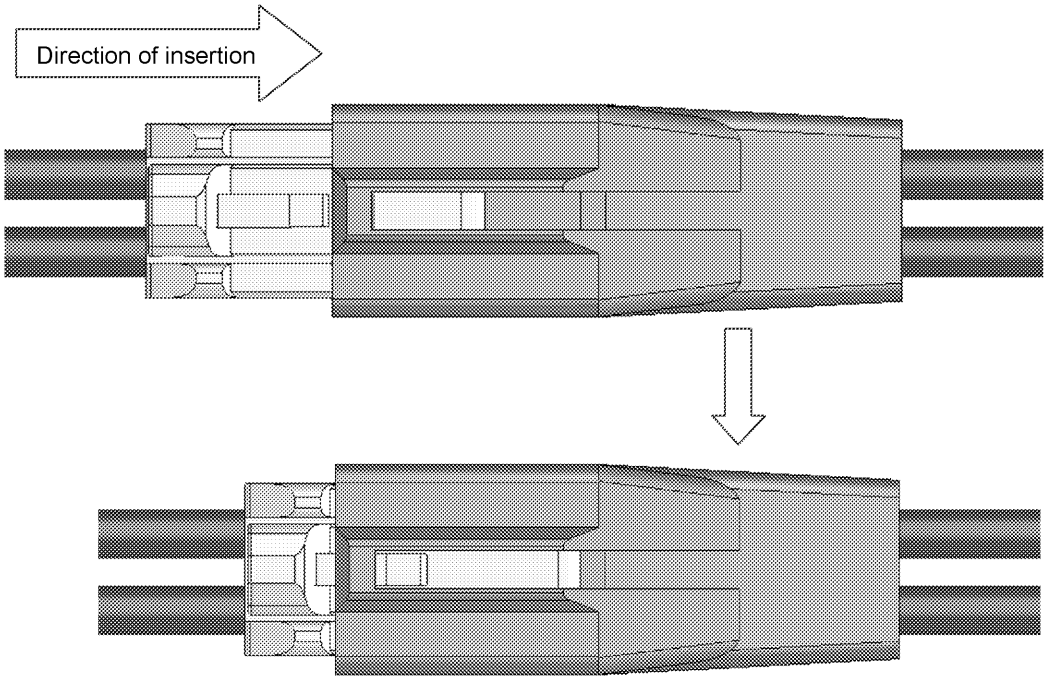

Fig.3 Insertion

Feb.1.2026 Copyright 2026 HIROSE ELECTRIC CO., LTD. All Rights Reserved.

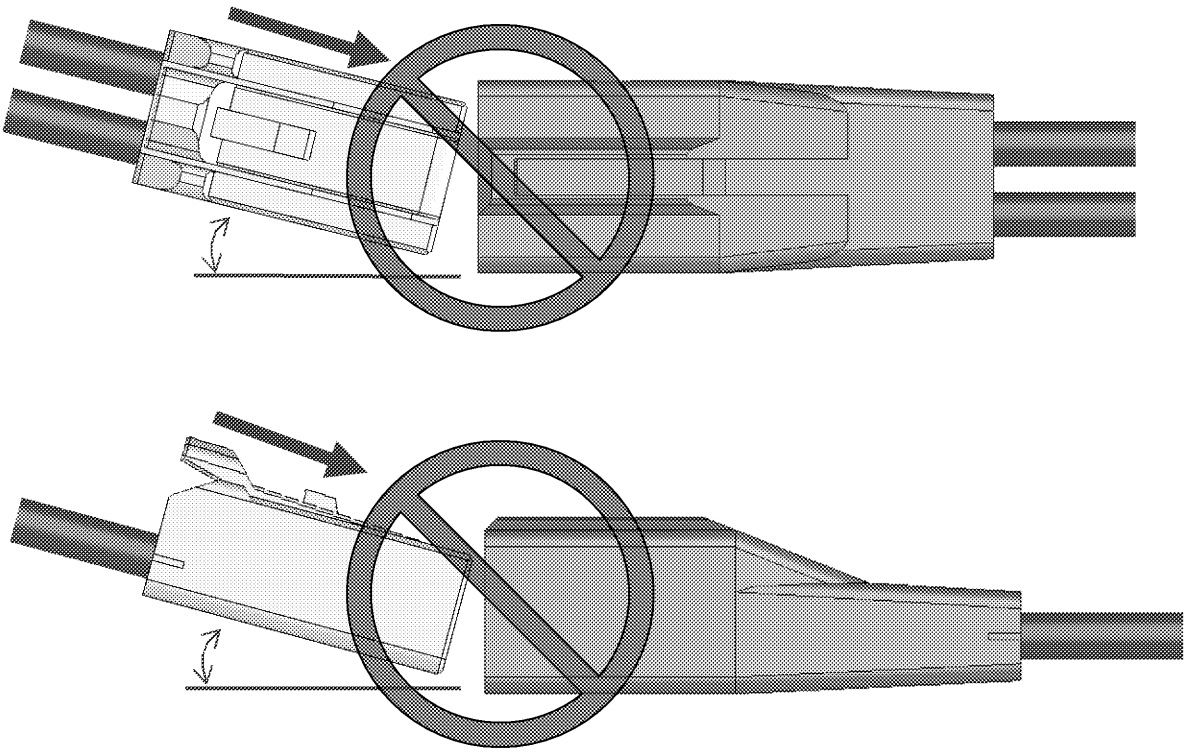

Fig.4 Prohibited insertion

To avoid degraded quality, do not tilt the socket for insertion as shown in the figure above.

3-1-c. Check fitting:

Make sure the socket has been firmly fit with the In-line plug.
(Check that the socket lock has been caught at the In-line plug lock either visually or by slightly pulling a cable by hand.)
To remove the socket, see 3-2. Socket removal.

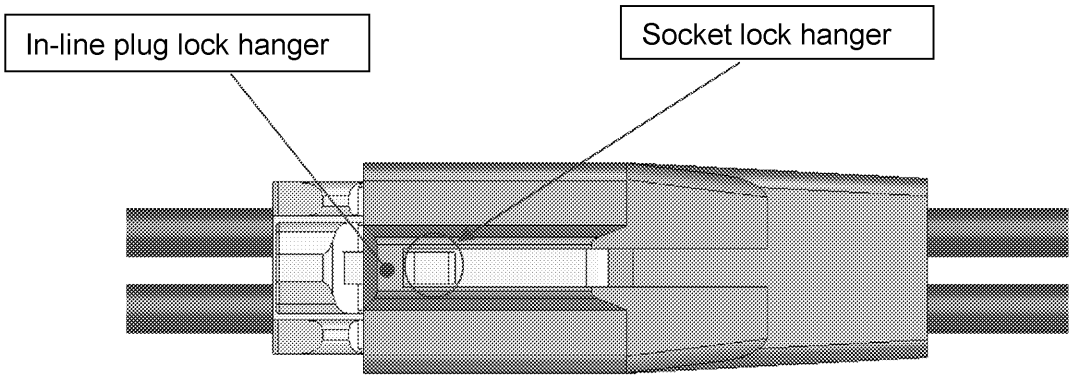

Fig.5 Check fitting

Feb.1.2026 Copyright 2026 HIROSE ELECTRIC CO., LTD. All Rights Reserved.

3-2. Socket removal

3-2-a. Removal:

Remove the socket while pressing with a finger the lock spring on the socket to unlock.

Note: To prevent the lock hanger from being damaged or the cables from being disconnected, do not remove the socket when it is locked.

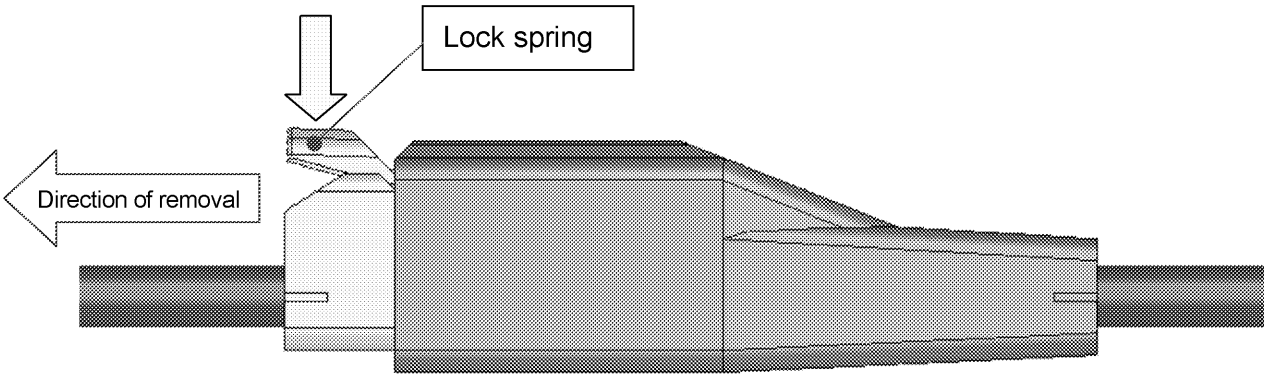

Fig.6 Socket removal

4. Precautions

- Do not insert or remove the socket while electrifying.
- Excessive external force applied to connectors could cause fault or damage. Therefore, avoid forced insertion or removal, impacts given by falling, or forced pulling of cables.

Feb.1.2026 Copyright 2026 HIROSE ELECTRIC CO., LTD. All Rights Reserved.