May.1.2024 Copyright 2024 HIROSE ELECTRIC CO., LTD. All Rights Reserved.
In case of consideration for using Automotive equipment / device which demand high reliability, kindly contact our sales window correspondents.

| | COUNT | DESCRIPTION OF REVISIONS | BY | CHKD | DATE | | COUNT | DESCRIPTION OF REVISIONS | BY | CHKD | DATE |
|---|---|---|---|---|---|---|---|---|---|---|---|
| 1 | 3 | RE-F-09671 | K.N | H.Y | 04.04.08 | | | | | | . . |
| 2 | 1 | DIS-F-000293 | K.D | H.O | 05.02.28 | | | | | | . . |
| | | | | | . . | | | | | | . . |

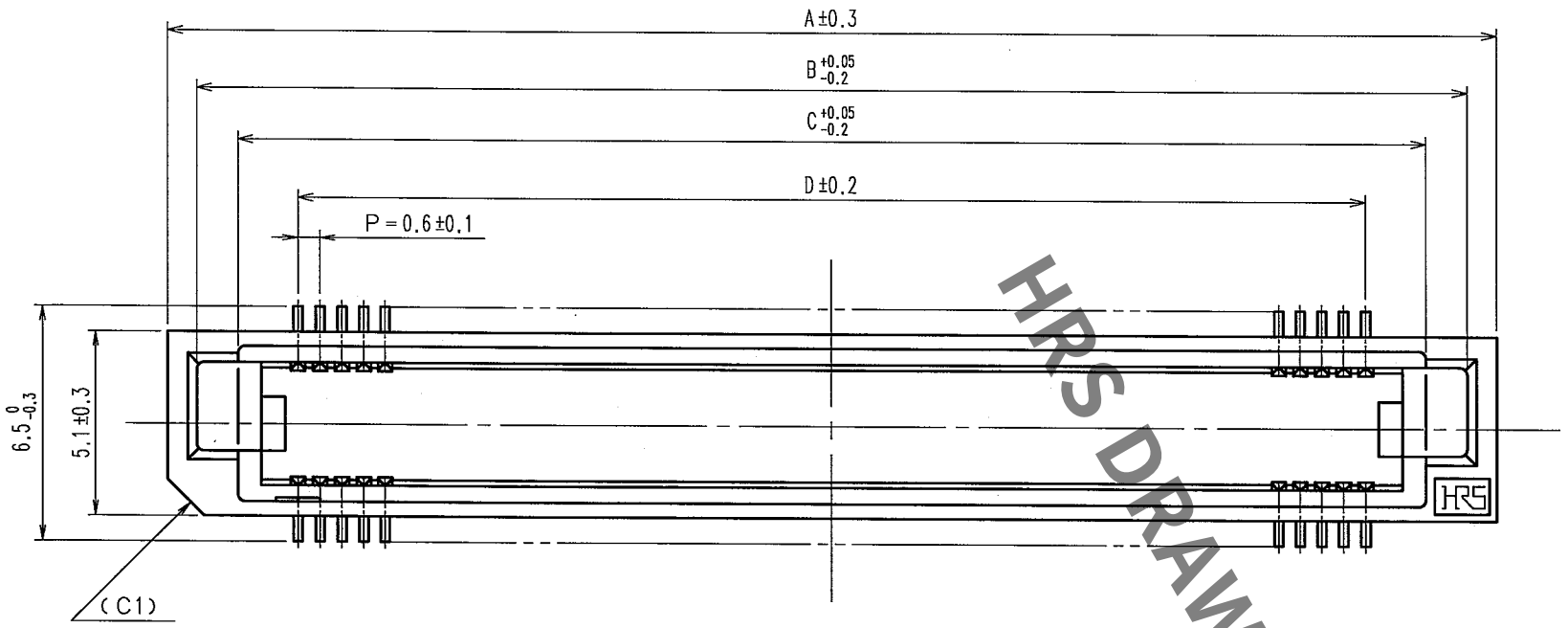


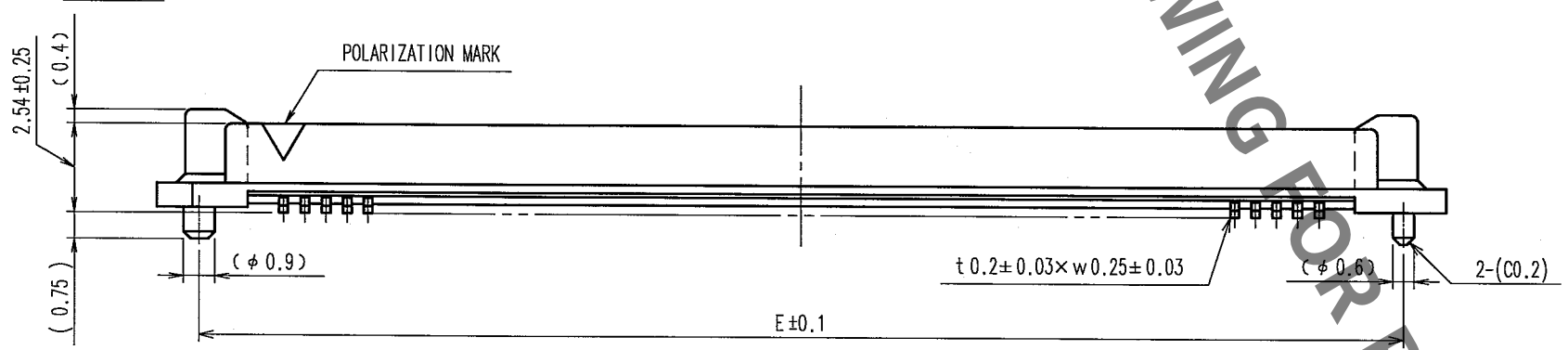


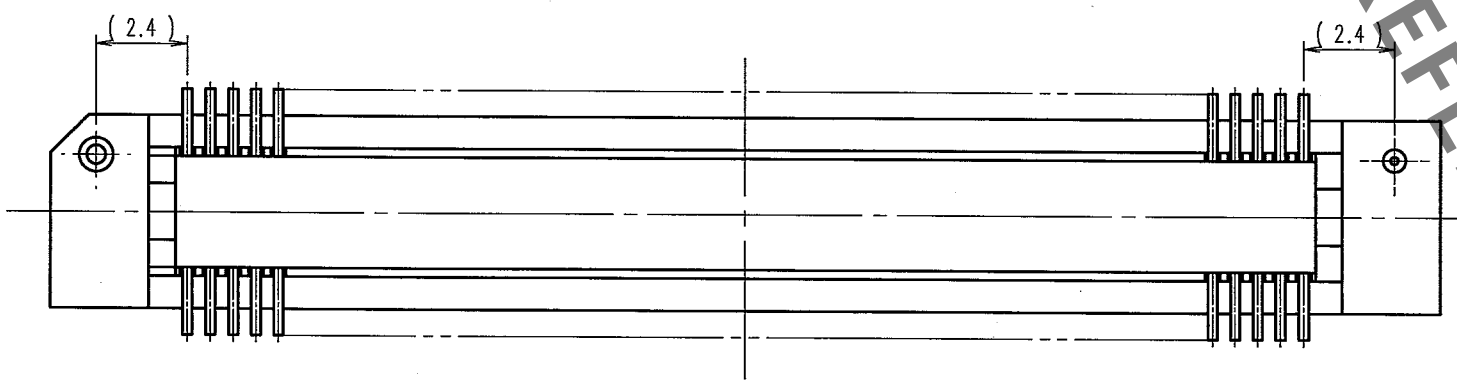


RECOMMENDED LAND PATTERN DIMENSION OF P.C.B. (MOUNTING SIDE)

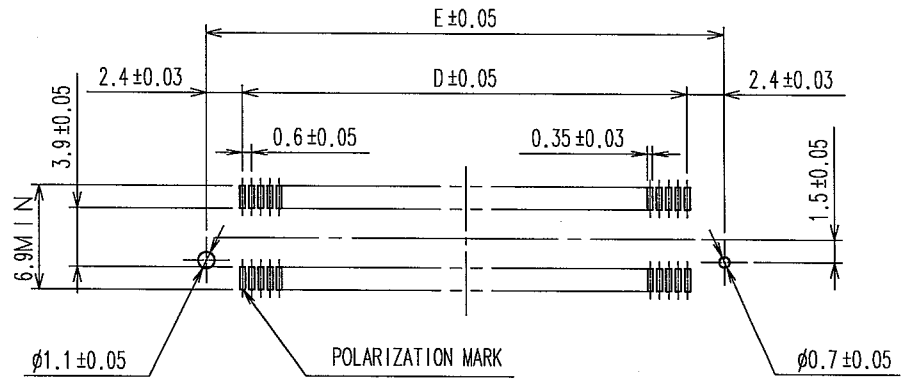


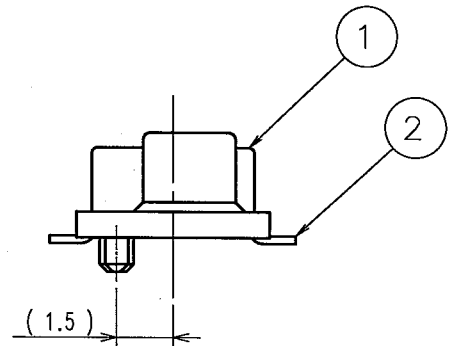


NOTE 1. LEAD CO-PLANARITY SHALL BE 0.1mm MAX.
2. EMBOSSED CARRIER TAPE PACKAGING SHALL BE APPLIED FOR THIS PRODUCT. SEE NEXT PAGE FOR DETAILS.
3. FOR MODIFICATION,ETC.,PREVENTIVE HOLE FOR SINK MARK MAY BE ADDED ACCORDING TO CIRCUMSTANCES.
4. THE DIMENSIONS IN PARENTHESES ARE FOR REFERENCE.
5 NUMBER OF CONTACTS.

DIMENSION TABLE OF CONNECTOR AND P.C.B. LAND PATTERN.

| PART No. | CODE No. | 5 | A | B | C | D | E |
|---|---|---|---|---|---|---|---|
| FX8- 60P-SV(92) | CL578-0001-6-92 | 60 | 24.6 | 23 | 20.7 | 17.4 | 22.2 |
| FX8- 80P-SV(92) | CL578-0003-1-92 | 80 | 30.6 | 29 | 26.7 | 23.4 | 28.2 |
| FX8- 90P-SV(92) | CL578-0004-4-92 | 90 | 33.6 | 32 | 29.7 | 26.4 | 31.2 |
| FX8-100P-SV(92) | CL578-0005-7-92 | 100 | 36.6 | 35 | 32.7 | 29.4 | 34.2 |
| FX8-120P-SV(92) | CL578-0006-0-92 | 120 | 42.6 | 41 | 38.7 | 35.4 | 40.2 |
| FX8-140P-SV(92) | CL578-0007-2-92 | 140 | 48.6 | 47 | 44.7 | 41.4 | 46.2 |

| NO. | MATERIAL | FINISH, REMARKS | NO. | MATERIAL | FINISH, REMARKS |
|---|---|---|---|---|---|
| 1 | PPS | LIGHT BROWN (UL94V-0) | 2 | PHOSPHOR BRONZE | CONTACT AREA:GOLD 0.1μm min.<br>LEAD AREA:GOLD FLASH<br>UNDER PLATING:NICKEL 0.5μm min. |

| CODE NO.(OLD) | DRAWN | DESIGNED | CHECKED | APPROVED | RELEASED |
|---|---|---|---|---|---|
| CL | S.SUZUKI 03.03.06 | K.NAKAMURA 03.03.06 | H.OKAWA 03.03.06 | Y.YOSHIMURA 03.03.06 | . . |

SCALE: FREE
UNITS: mm
DRAWING NO. EDC3-150726-22
HRS HIROSE ELECTRIC CO., LTD
PART NO. FX8-**P-SV(92)
CODE NO. CL578
1/2

TO PCK

HRS DRAWING FOR REFERENCE

May.1.2024 Copyright 2024 HIROSE ELECTRIC CO., LTD. All Rights Reserved.
In case of consideration for using Automotive equipment / device which demand high reliability, kindly contact our sales window correspondents.

| | COUNT | DESCRIPTION OF REVISIONS | BY | CHKD | DATE | | COUNT | DESCRIPTION OF REVISIONS | BY | CHKD | DATE |
|---|---|---|---|---|---|---|---|---|---|---|---|
| △ | | | | | . . | △ | | | | | . . |
| △ | | | | | . . | △ | | | | | . . |
| △ | | | | | . . | △ | | | | | . . |

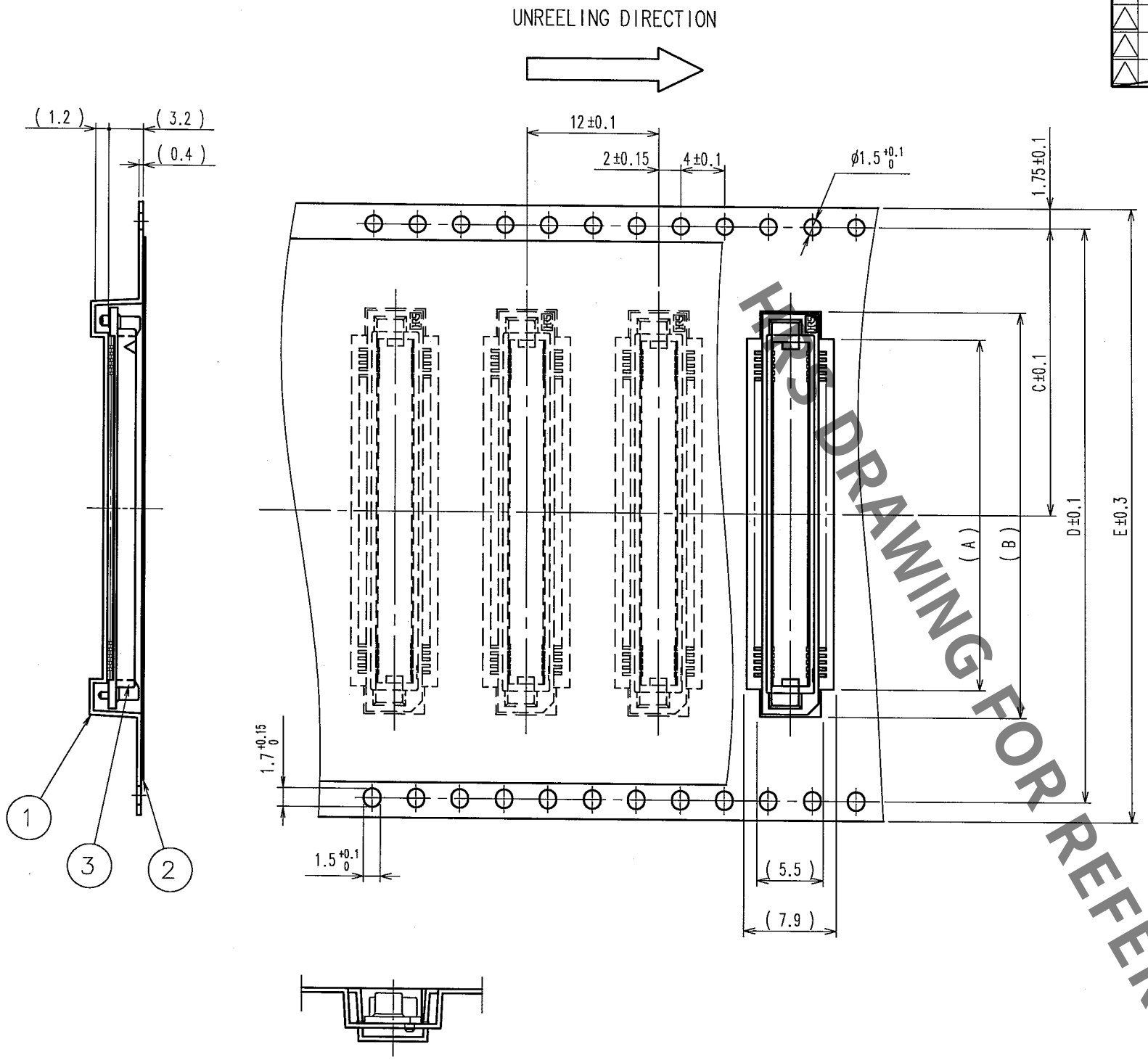


HRS DRAWING FOR REFERENCE

## REEL DIMENSION

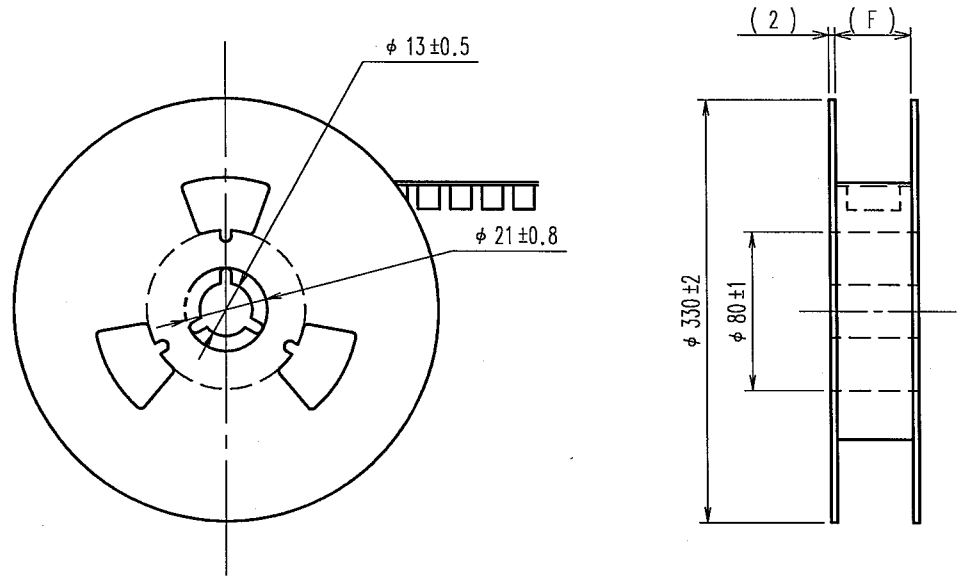


△1 DIMENSION TABLE OF EMBOSSED CARRIER TAPE AND REEL.

| PART No. | CODE No. | 2> | A | B | C | D | E | F |
|---|---|---|---|---|---|---|---|---|
| FX8- 60P-SV(92) | CL578-0001-6-92 | 60 | 20 | 25 | 20.2 | 40.4 | 44 | 44.4 |
| FX8- 80P-SV(92) | CL578-0003-1-92 | 80 | 26 | 31 | 20.2 | 40.4 | 44 | 44.4 |
| FX8- 90P-SV(92) | CL578-0004-4-92 | 90 | 29 | 34 | 20.2 | 40.4 | 44 | 44.4 |
| FX8-100P-SV(92) | CL578-0005-7-92 | 100 | 32 | 37 | 26.2 | 52.4 | 56 | 56.4 |
| FX8-120P-SV(92) | CL578-0006-0-92 | 120 | 38 | 43 | 26.2 | 52.4 | 56 | 56.4 |
| FX8-140P-SV(92) | CL578-0007-2-92 | 140 | 44 | 49 | 34.2 | 68.4 | 72 | 72.4 |

NOTE 1 1 RELL : 1000 CONNECTORS
2> NUMBER OF CONTACTS

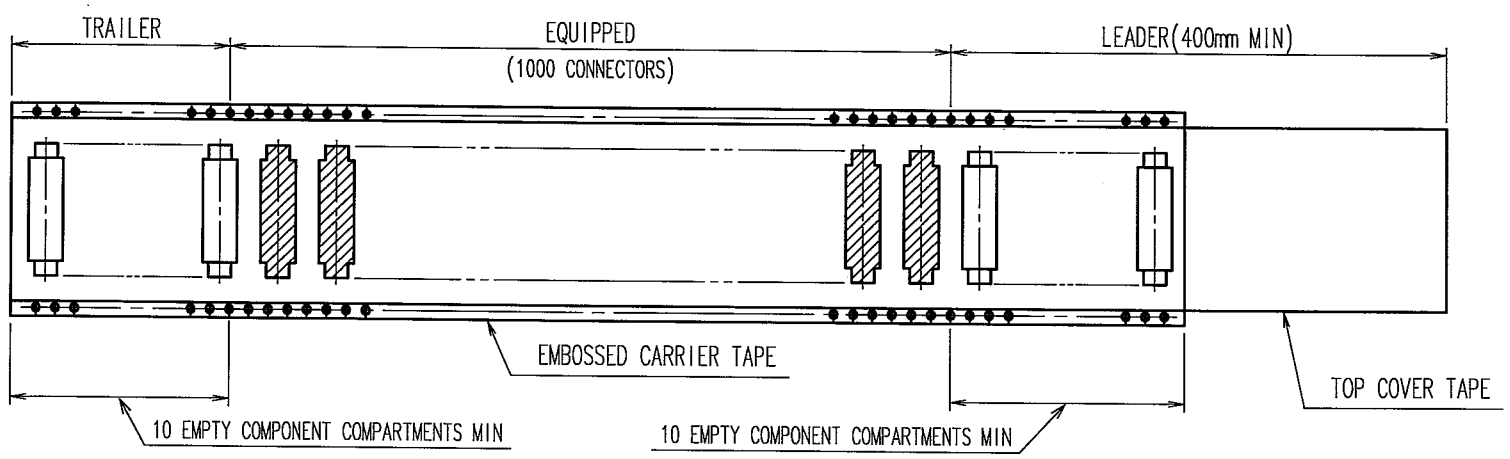


| NO. | MATERIAL | FINISH, REMARKS | NO. | MATERIAL | FINISH, REMARKS |
|---|---|---|---|---|---|
| 2 | POLYESTER | (TOP COVER TAPE) | | | |
| 1 | PS △1 | (EMBOSSED CARRIER TAPE) | 3 | | (CONNECTOR) |

| CODE NO.(OLD) | DRAWN | DESIGNED | CHECKED | APPROVED | RELEASED |
|---|---|---|---|---|---|
| CL | S.SUZUKI 03.03.06 | K.NAKAMURA 03.03.06 | H.OKAWA 03.03.06 | Y.YOSHIMURA 03.03.06 | . . |

SCALE: FREE
UNITS: mm
DRAWING NO.: EDC3-150726-22
HRS HIROSE ELECTRIC CO., LTD
PART NO.: FX8-**P-SV(92)
CODE NO.: CL578
2/

| TO |
|---|
| PCK |
| |
| |
| |