Mar.1.2026 Copyright 2026 HIROSE ELECTRIC CO., LTD. All Rights Reserved.

BM25 Series Guideline

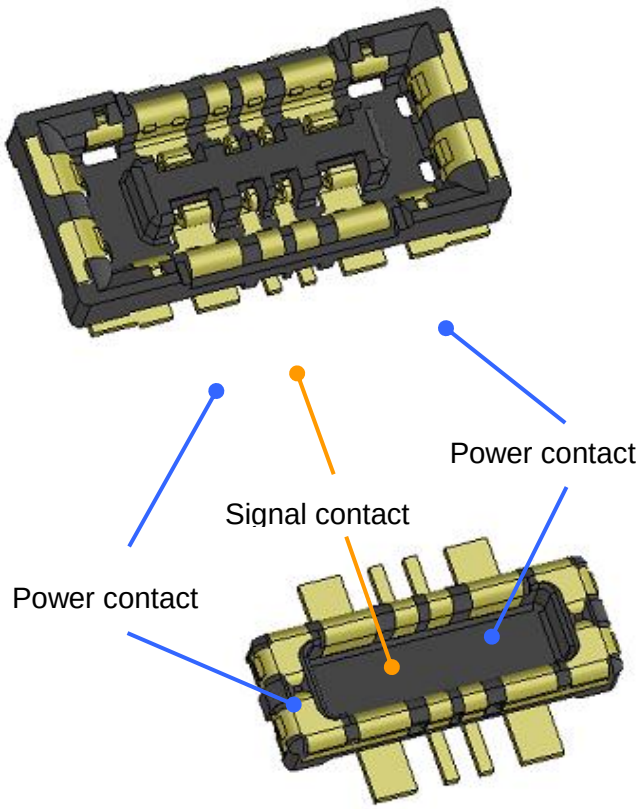

	Approver	WR.FUKUCHI	20210402
	Checker	TS.MIYAZAKI	20210402
	Designer	TY.MORISHITA	**20210402**
REVISIONS			RevNo **0**
Designer	Checker	Approver	DATE

TABLE OF CONTENTS

Page Number

1.Notice for Device Designing 3

1-1 Notice for mechanical designing 3
1-1.a Disengaging prevention 3
1-1.b FPC FIXING 4
1-1.c Location of other components around connector 4
1-1.d Marking for mating position 4

1-2 Notice for PWB designing 5
1-2.a Recommended PWB pattern 6
1-2.b PWB pad layout and connector location 6
1-2.c PWB designing 7
1-2.d FPC designing 8

2. Notice for Mounting 10

2-1 Metal mask design 10

2-2 Reflow profile 11

2-3 Notice for 12
2-3.a Repairing condition 12
2-3.b Solder swelling 12

3 Notice for Connector Handling

3-1 Connector insertion operation 13

3-2 Connector withdrawal operation 14

4 PWB for Evaluation test 15

4-1 Contact Resistance Measurement 15

4-2 Temperature Rise Test 16

5 Electrical inspection jig 17

5-1 Product name 17

5-2 Electric inspection jig summary 17

5-3 Arrangement of the electric inspection jig 18

5-4 Contact information of YOKOWO CO., LTD. 19

Mar.1.2026 Copyright 2026 HIROSE ELECTRIC CO., LTD. All Rights Reserved.

1. Notice for Device Design

1.1 Notice for mechanical designing

1-1.a Disengagement prevention

Please use buffer material.

There is still possibility that connectors are disengaged if strong impact, such as dropping, is put against connectors in use. In order to prevent connectors from disengaging, please make sure to put buffer material between a connector and a cover case to hold down the connector pair to the mating direction.

If a connector is directly pressed down by a cover case, there is a possibility that the cover case is bent and it may cause connector disengagement when the device is dropped. Please avoid a design that the connector is directly pressed by cover case, instead, use put the buffer material to press down the connector.
Buffer material must be the size which is able to cover all over the connector mounting area.

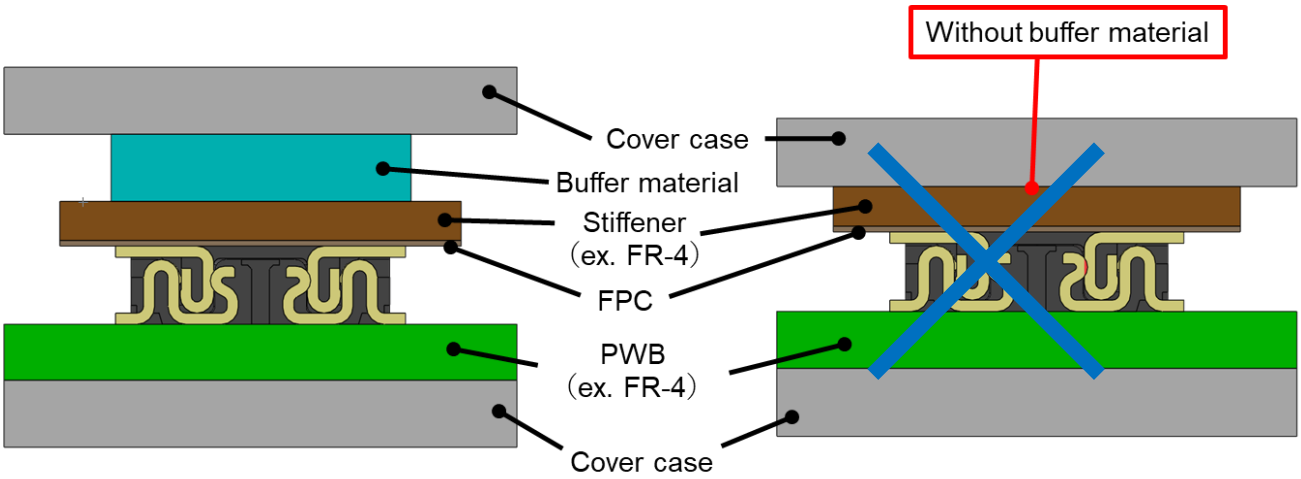

Mar.1.2026 Copyright 2026 HIROSE ELECTRIC CO., LTD. All Rights Reserved.

Mar.1.2026 Copyright 2026 HIROSE ELECTRIC CO., LTD. All Rights Reserved.

1-1.b FPC FIXING

Do not completely fix the FPC position.
If FPC position is fixed, connector will get direct stress from dropping impact.

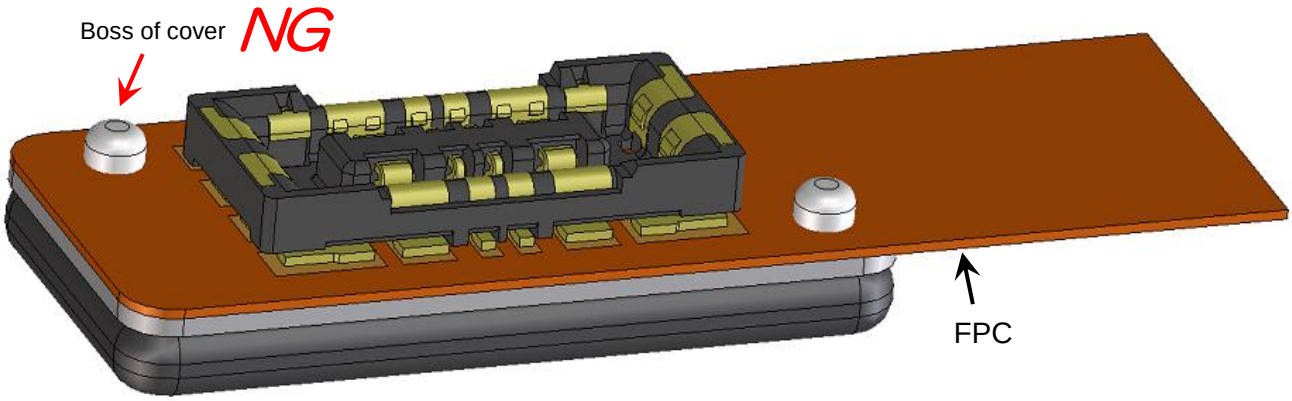

1-1.c Location of other components around connector

Please do not locate any material which may affect on connector mating around the connectors.
It may cause a misalignment or breakage.

1-1.d Marking for mating position

Putting some marking to indicate the exact mating position is recommended.
It can support smooth mating.

Marking for positioning

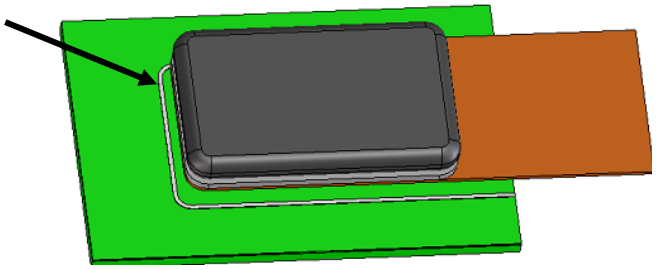

Mar.1.2026 Copyright 2026 HIROSE ELECTRIC CO., LTD. All Rights Reserved.

1.2 Notice for PWB designing

1-2.a Recommended PWB pattern

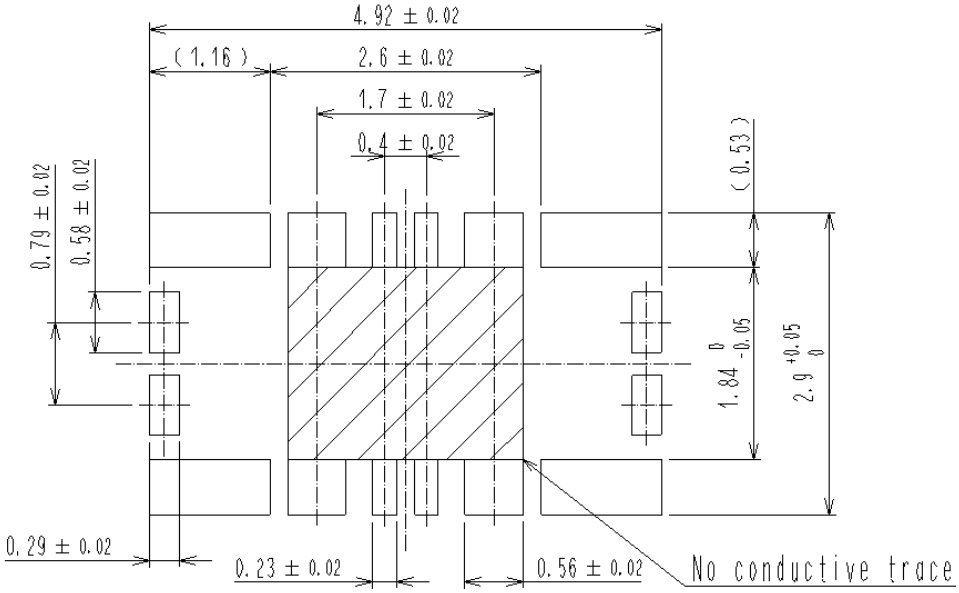

Fig 1-2.a(1) Receptacle (BM25-4S/2-V) Recommended PWB layout

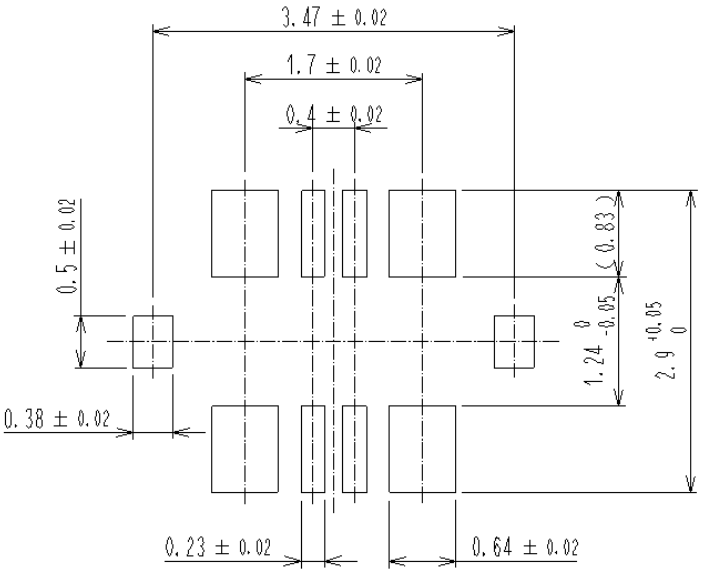

Fig 1-2.a(2) Plug (BM25-4P/2-V) Recommended PWB layout

Mar.1.2026 Copyright 2026 HIROSE ELECTRIC CO., LTD. All Rights Reserved.

1-2.b PWB pad layout and connector location

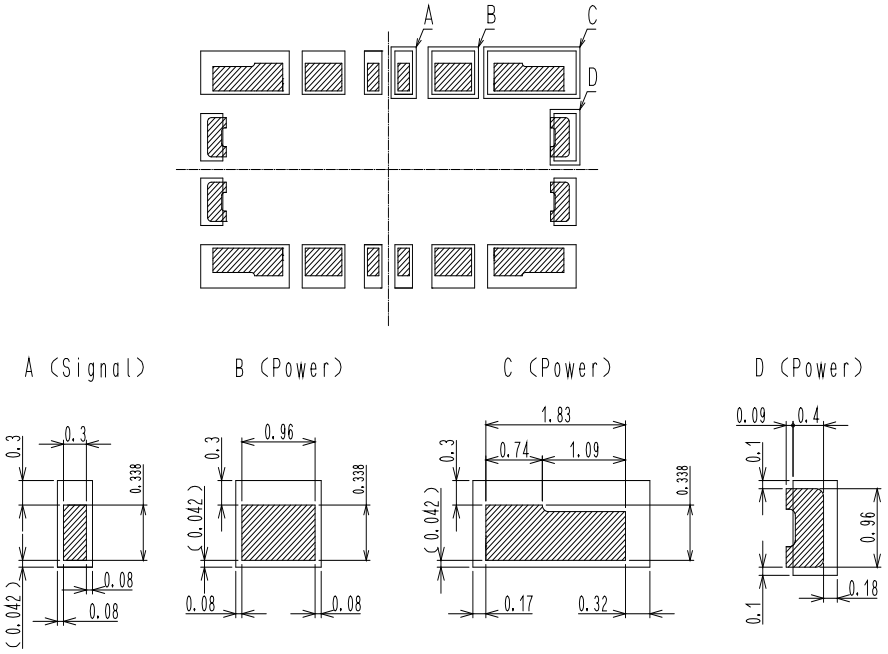

Connector read on PWB layout

PWB layout

Fig 1-2.b(1) Receptacle Positioning

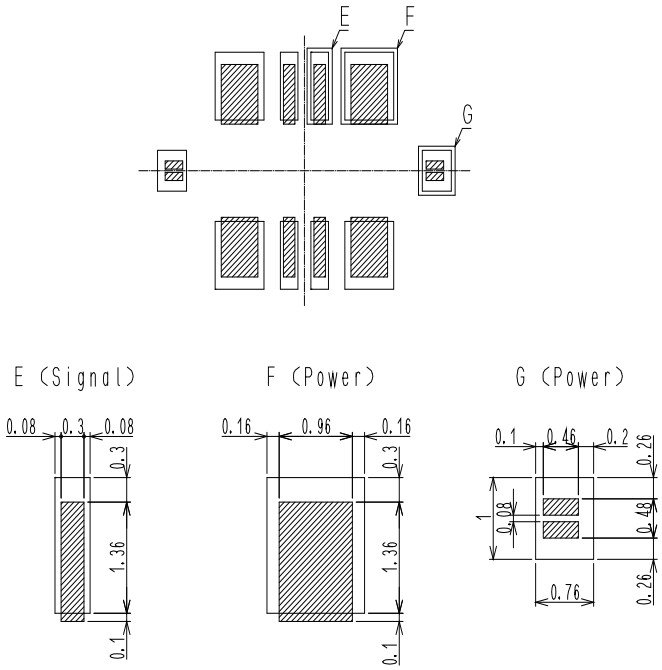

Connector read on PWB layout

PWB layout

Fig 1-2.b(2) Plug Position

Mar.1.2026 Copyright 2026 HIROSE ELECTRIC CO., LTD. All Rights Reserved.

1-2.c Notice for PWB design

- **Recommended PWB pattern width is 1mm（Copper foil thickness=35μm）/1A**

PWB Specifications for temperature rise evaluations are as follows.

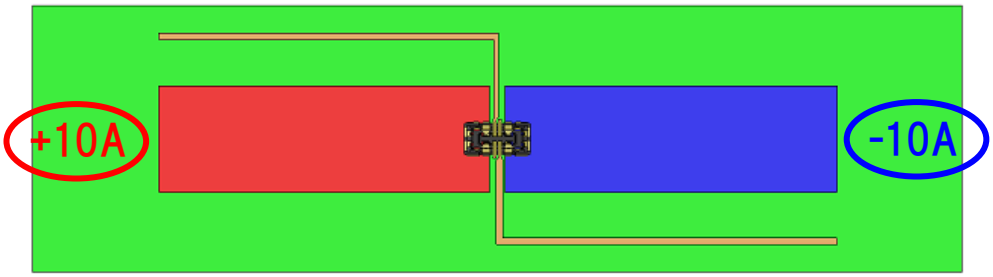

1-2c(1) PWB for temperature rise evaluations of receptacle

Material：FR-4
PAD：Recommended pattern
Recommended Power contact pattern width：10mm
Recommended Signal contact pattern width ：0.3mm
Copper foil thickness：35μm
PWB size 70×20×0.8mm

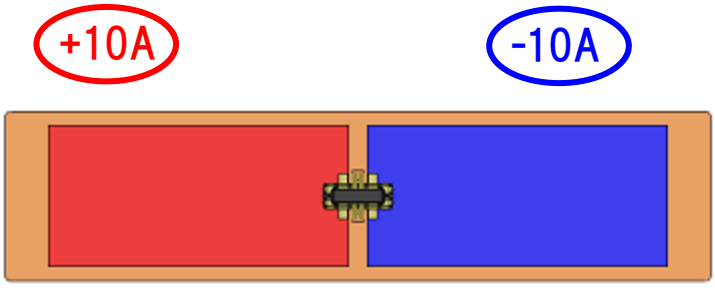

1-2c(2) PWB for temperature rise evaluations of plug

Material：polyimide（single layer）
stiffener：FR-4
PAD：Recommended pattern
Recommended Power contact pattern width：10mm
Recommended Signal contact pattern width：0.3mm
Copper foil thickness：35μm
PWB size：38×11×0.435mm
*including stiffener thickness
Stiffener size：7×11×0.3mm

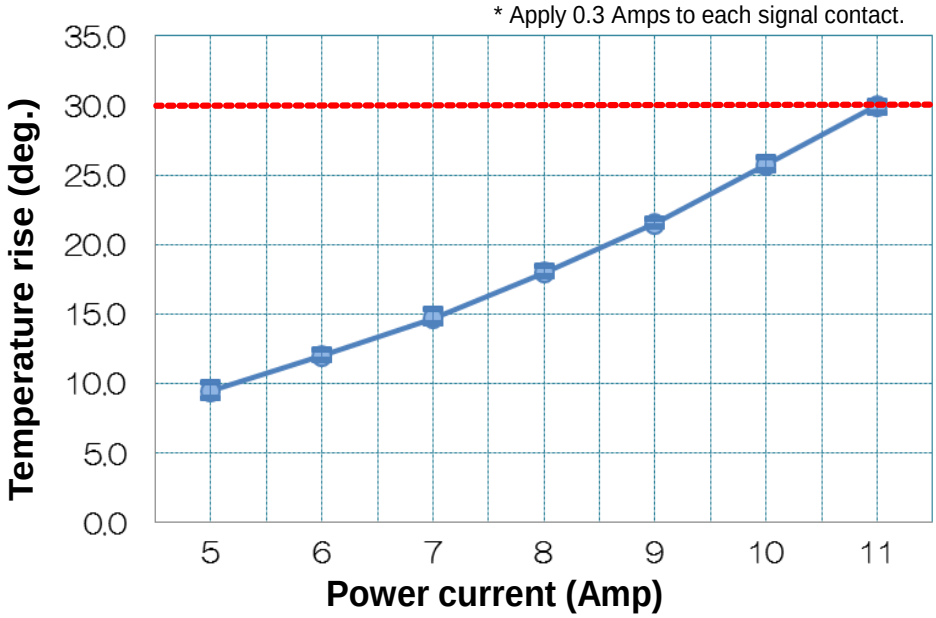

- **Please design circuit of power supply pad without splitting current flow**
  Electric current might be concentrated in a certain circuit and cause over current

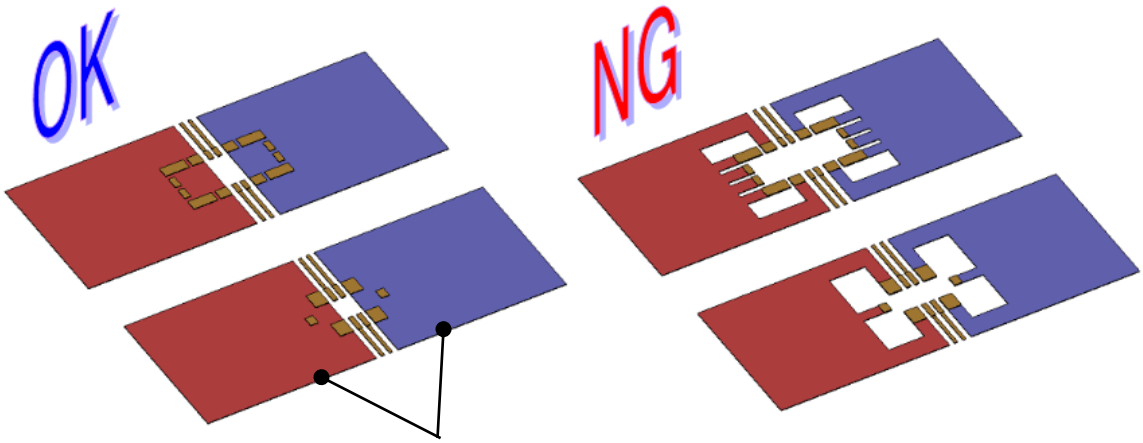

Power supply part circuit

- **Please design PWB layout properly so that fillet are properly formed.**
  The recommended PWB layout is designed so that the connector can be soldered to the PWB.

- **Please comply with our recommended inner side of PWB pattern of receptacle**
  It may cause solder wicking.

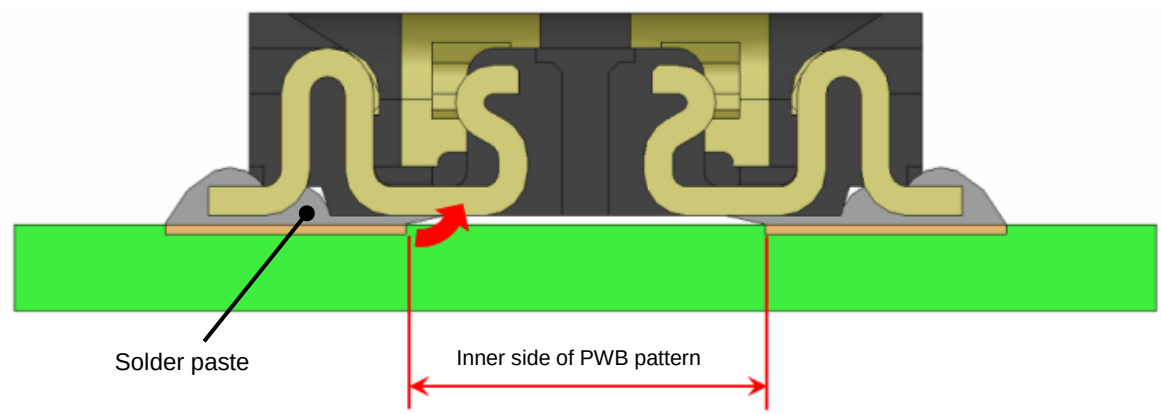

- **Please note pattern and the height of VIA hole.**
  In case there's PWB pattern or VIA HOLE with too much height underneath the onnector, there is a possibility to cause soldering failure.

Mar.1.2026 Copyright 2026 HIROSE ELECTRIC CO., LTD. All Rights Reserved.

1-2.d FPC design

- **Please make sure to put a stiffener on the backside of the FPC.**
  It may cause the connector to peel-off or break.

【note】If using a thinner stiffener than our recommendation, please contact and discuss with your Hirose contact window.

Recommended stiffener
F R - 4：t=0.3mm MIN
SUS：t=0.2mm MIN

- **When mounting the connector, please consider the bending of FPC by heating, and use FPC with low risk of bending.**
  It may cause bending when heating.

- **Please design the FPC to have a flexibility to absorb the displacement of the connecter cased by fixing PWB and battery.**

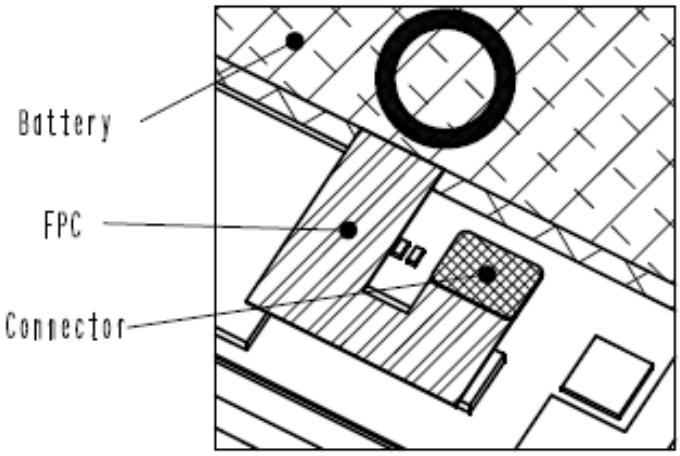

Recommended FPC Routing

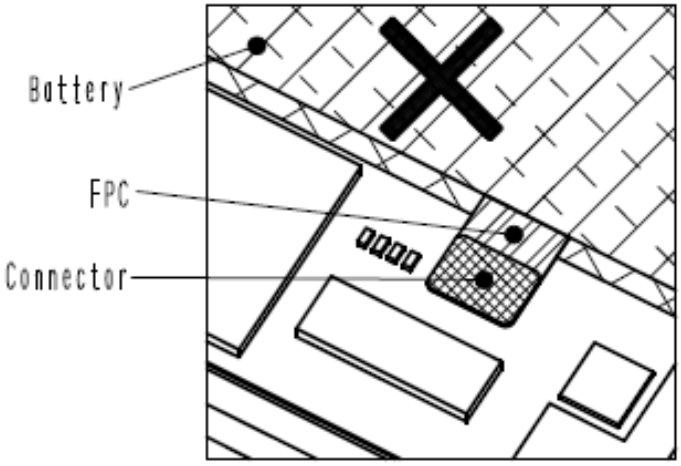

Unrecommended FPC Routing
(Too short, not winding)

Mar.1.2026 Copyright 2026 HIROSE ELECTRIC CO., LTD. All Rights Reserved.

2. Notice for Mounting

2-1 Metal mask design

Make sure the latest specification when designing.

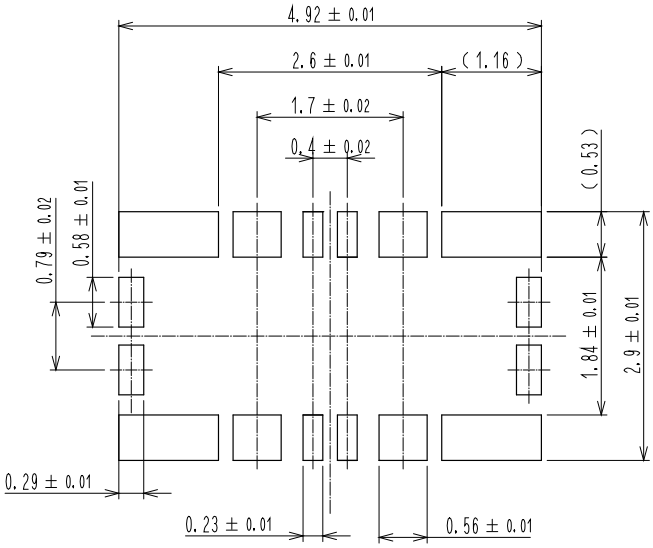

Recommended stencil
thickness: 0.10mm
Open ratio:100%

Fig 2-1.(1) Recommended stencil layout of receptacle (BM25-4S/2-V)

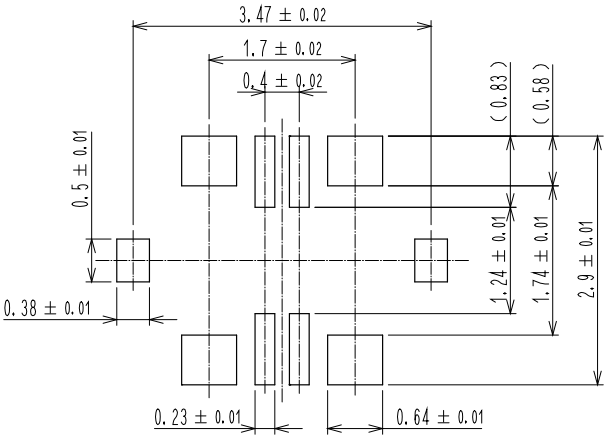

Recommended stencil
thickness：0.10mm
Open ratio :
Signal contact:100%
Power contact:70%

Fig 2-1.(2) Recommended stencil layout of plug (BM25-4P/2-V)

Notice：
If the soldering paste exceeds the recommended amount, there is a possibility of solder swelling.
【note】Please refer to “Solder paste swelling” on page 10.

Mar.1.2026 Copyright 2026 HIROSE ELECTRIC CO., LTD. All Rights Reserved.

2-2 Reflow profile

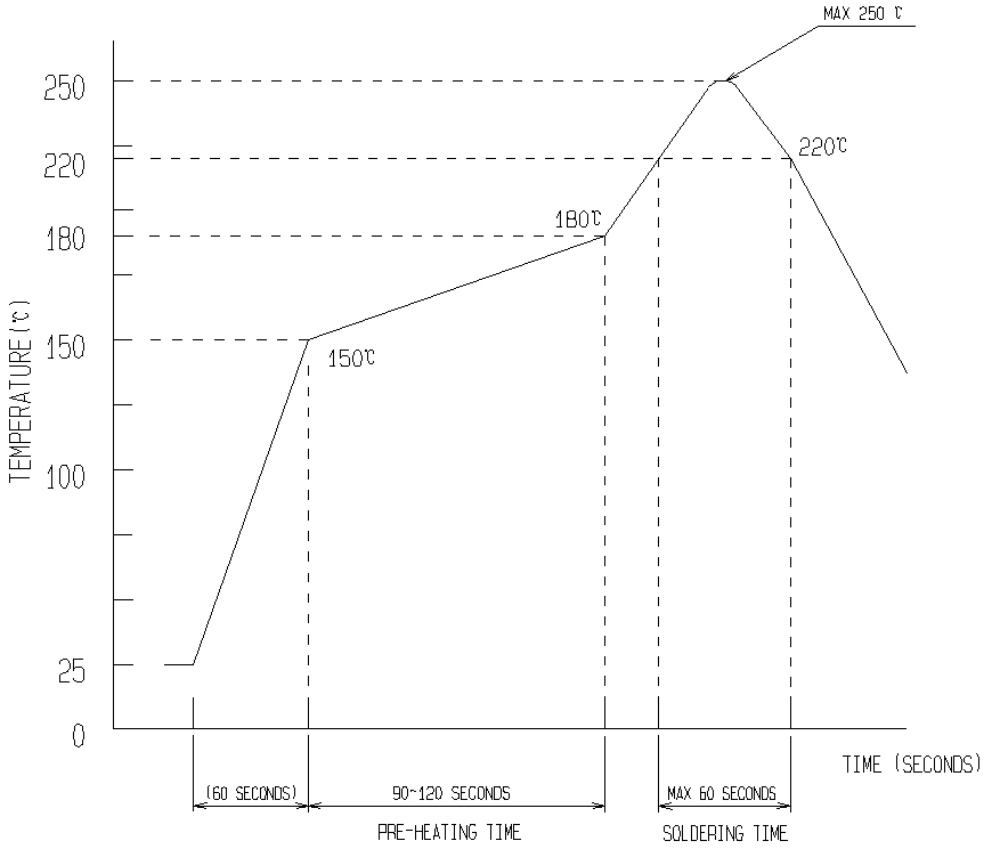

Fig. 2-2 Recommended reflow profile

•Profile measurement point

The temperature profile indicates the board surface temperature at the point of contacts with the connector terminals.

•Reflow cycles

Up to 2 cycles of reflow soldering are possible under the same conditions.
*Temperature between 1st and 2nd reflow must be cooled down to room temperature.

•Reflow heating method and condition

Far-infrared heater and hot convective blowers used in combination, normal atmosphere, or nitrogen atmosphere

• Notifications for N_2 reflow

Please set O_2 concentration more than 1000[ppm] (HRS recommendation) in SMT
Please feel free to contact us when it is less than 1000[ppm].

Mar.1.2026 Copyright 2026 HIROSE ELECTRIC CO., LTD. All Rights Reserved.

2-3 Repair Condition

2-3.a Repair Condition

Receptacle

Repairing condition:
・Soldering iron 350° C, 3seconds MAX
Notice:
・Please do not put stress on contacts.
・Please do not touch housing with a

Plug

Repairing condition:
・Soldering iron 350° C, 3seconds MAX
Notice:
・Please do not put stress on contacts.
・Please do not touch housing with a soldering iron.

2-3.b Solder swelling

- **Please keep the soldering paste height less than 0.02mm.**
  It may effect on the board to board distance.

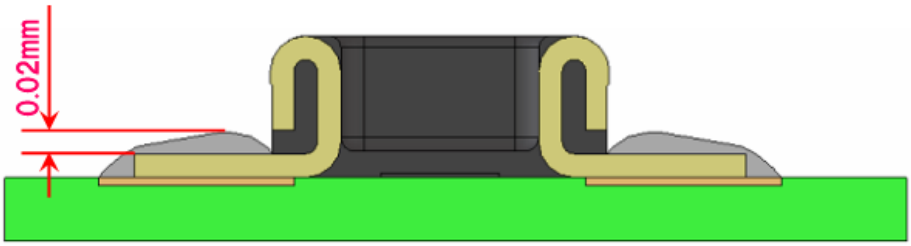

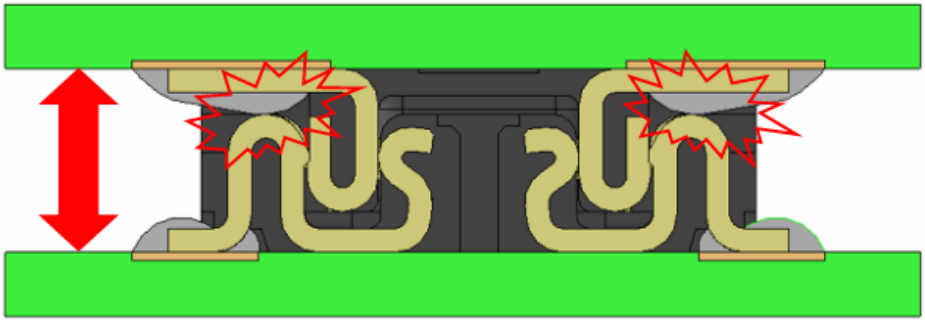

Mar.1.2026 Copyright 2026 HIROSE ELECTRIC CO., LTD. All Rights Reserved.

3. Notice for Connector Handling

3-1 Connector insertion operation

Please mate BM25 connectors by hand

Manual for inserting operation

1） **Find the alignment area with hand to locate the connector in the appropriate mating position.**

BM25 Series have guidance ribs on receptacle side for smooth mating.
Put the connector on these ribs so that they can be self-aligned.

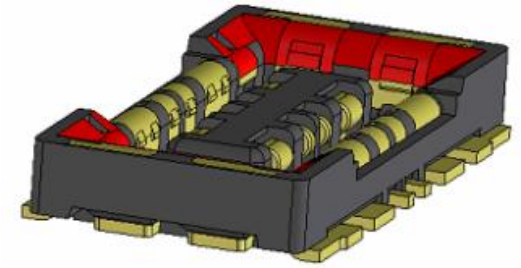

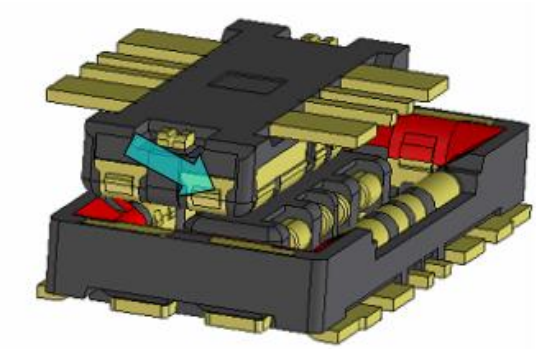

2） **When the connector comes to the appropriate position, the connector comes into the aligned position.**

If the connector comes into aligned position, it can be recognized by hand that the connector goes down one level.

Find the appropriate position
moving the connector back and

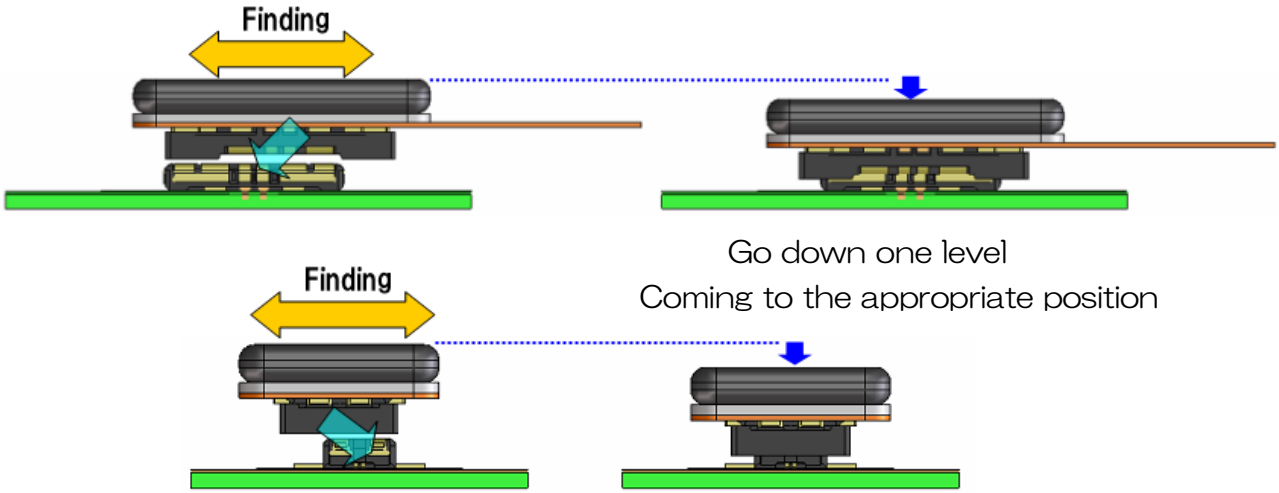

3） **Mate when the connectors are in alignment position**

When the connectors are in alignment position, the connector pair cannot be moved back and forth and around as they are mated in a parallel position.

4） **Please make sure connectors are mated completely.**

If one side is floating or the connectors are mated at a slant, please unmate once, and then mate them once again, following the procedures above from the beginning.

Mar.1.2026 Copyright 2026 HIROSE ELECTRIC CO., LTD. All Rights Reserved.

Mar.1.2026 Copyright 2026 HIROSE ELECTRIC CO., LTD. All Rights Reserved.

3-2 Connector withdrawing operation

1）Vertical Direction

It may be difficult to unmate from vertical direction due to FPC thickness or large pin count.

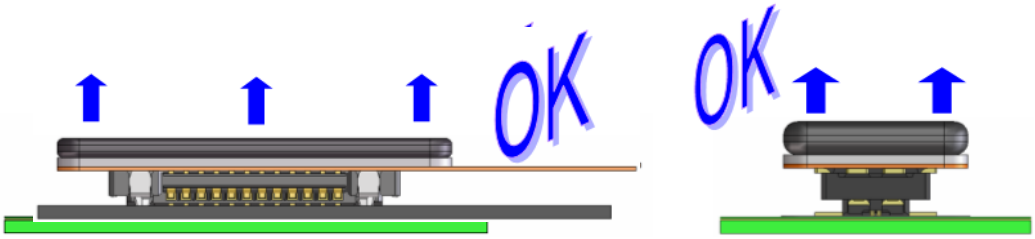

2）Extraction from length direction

Please unmate the connector lifting one side of it diagonally against the contact pitch direction.

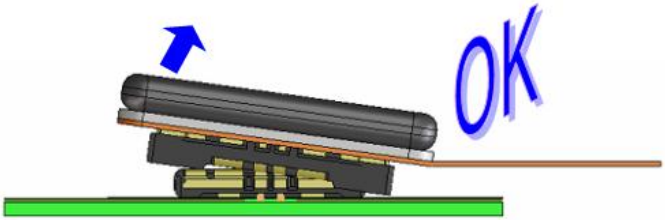

3）Extraction from width direction

When removing from width side, please pull the edge of FPC board for vertical direction.
Please avoid withdrawing the connector from width side. It may damage the contacts.

4）If the FPC is not strong enough, conduct the test on FPC to repeat operation.

If FPC is not strong enough, there is a possibility that contacts may be pulled off or broken. Please make sure to conduct the test on FPC to repeat operation several times in an early stage build.

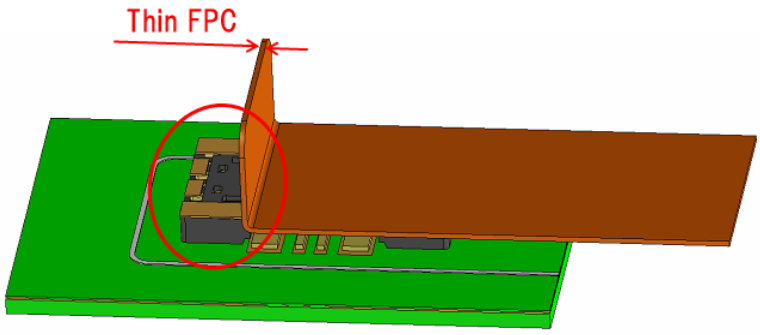

4. PWB for Evaluation test

4-1 Contact Resistance Measurement

◆PWB for Plug（PWB）

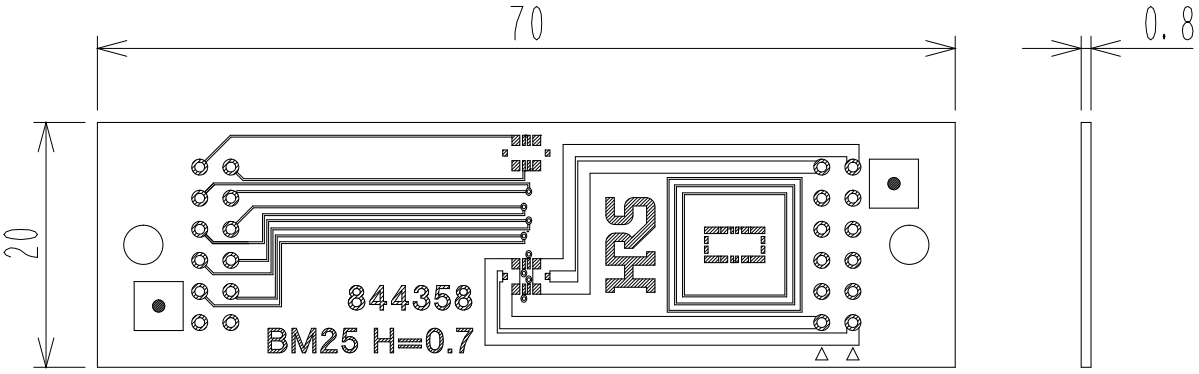

Copper foil thickness：35μm

◆PWB for Receptacle（FPC）

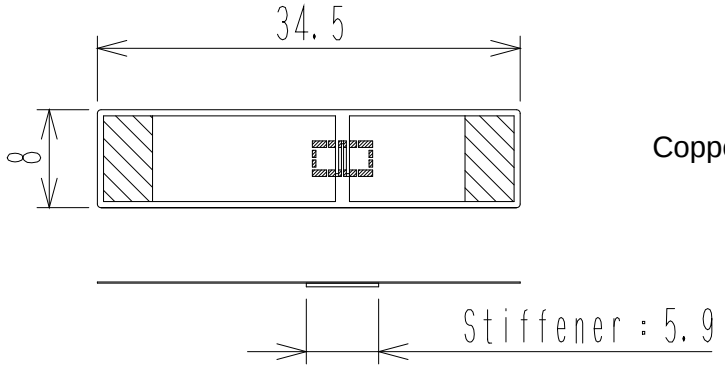

Copper foil thickness：35μm

FPC Material Configuration

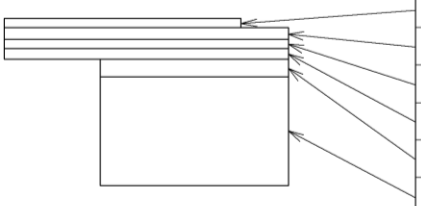

[μm]

Layer	Material	Thickness
Resist	Ink	15
Cu foil		35
Adhesive		20
Base film	Polimide	25
Adhesive	Thermoplastic adhesive	30～40
Stiffener	FR-4	300
	SUS	200
Total		325～435

Mar.1.2026 Copyright 2026 HIROSE ELECTRIC CO., LTD. All Rights Reserved.

4-2 Temperature Rising Test

◆PWB for Receptacle（PWB）

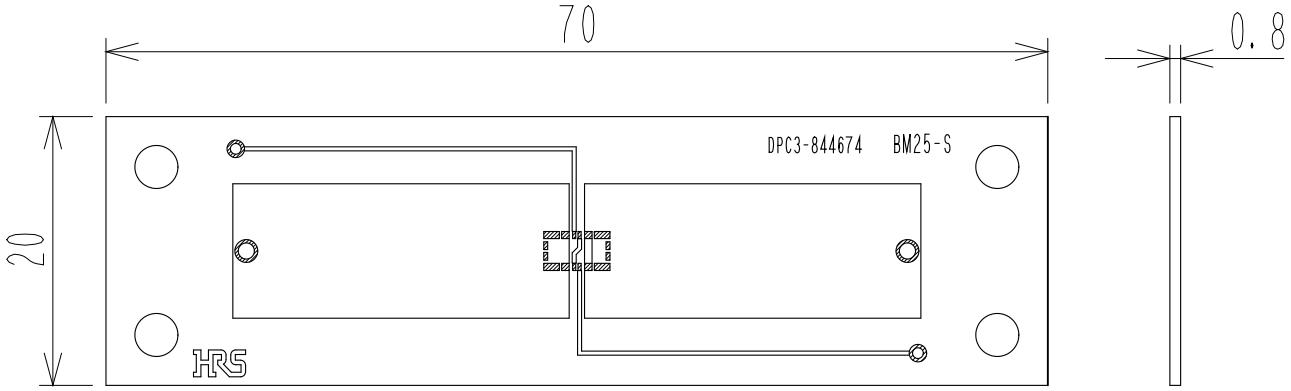

Material：FR-4
PAD：Recommended pattern
Recommended Power terminal：10mm
Recommended Signal terminal：0.3mm
Copper foil thickness：35μm
PWB size 70×20×0.8mm

◆PWB for Plug（FPC）

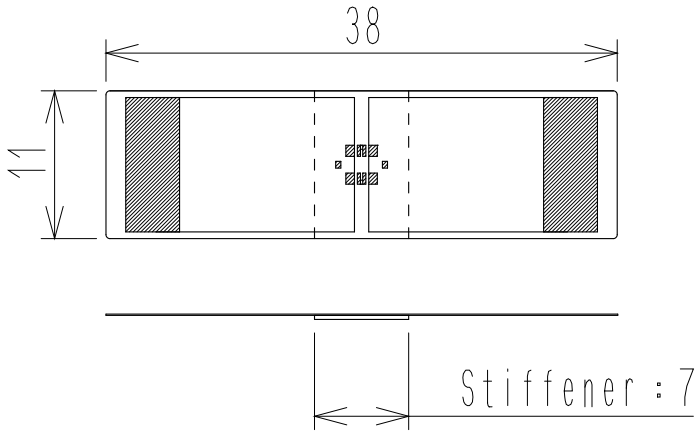

Material：polyimide（stratum）
reinforcing plate：FR-4
PAD：Recommended pattern
Recommended Power terminal：10mm
Recommended Signal terminal：0.3mm
Copper foil thickness：35μm
PWB size：38×11×0.435mm
*include reinforcement board pressure
reinforcing plate size：7×11×0.3mm

Mar.1.2026 Copyright 2026 HIROSE ELECTRIC CO., LTD. All Rights Reserved.

5. PWB for Evaluation test

About electric inspection of the connector. We recommend test connector made by YOKOWO CO.LTD. (URL http://www.yokowods.co.jp)

5-1 Product name

Connector product name	Inspection tool by YOKOWO
BM25-4P/2-V(**)	BM25-04P-type of wiring(Plug 4P)
BM25-4S/2-V(**)	BM25-04S-type of wiring(Receptacle 4P)

5-2 Inspection jig summary

It is the inspection tool which can easily inspect the connector which implemented to an FPC.

◆Normal Usage(Using the Presser Lever)

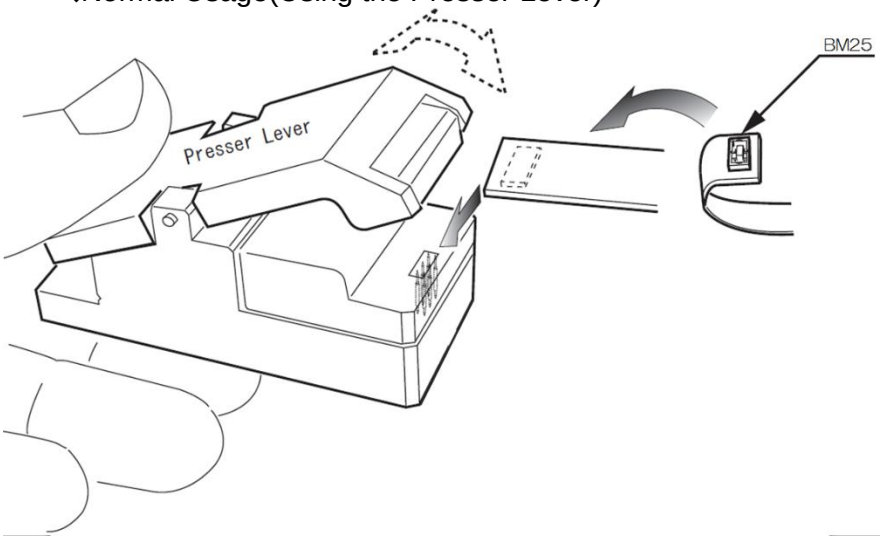

◆Remove the Presser Lever and Pressing with a finger

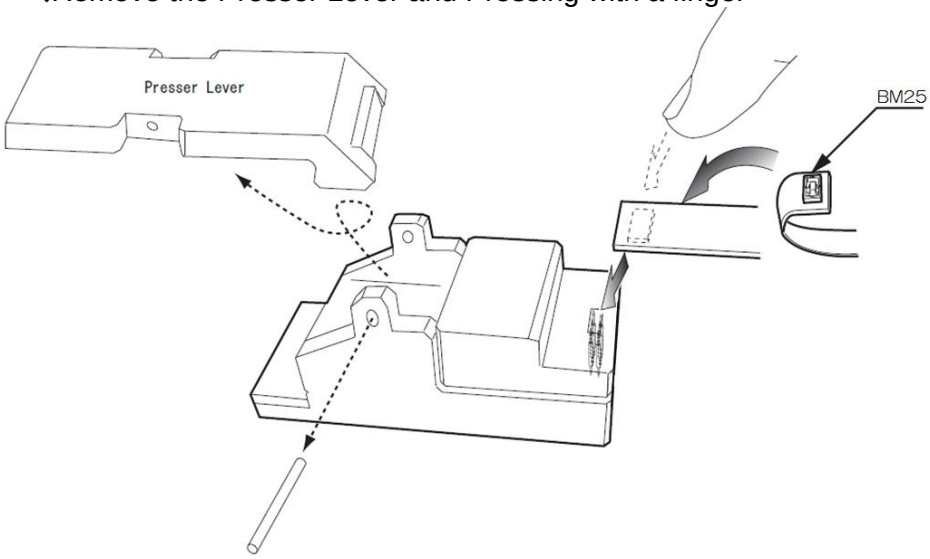

Tool can be attached to inspection machine by removing presser lever.

Mar.1.2026 Copyright 2026 HIROSE ELECTRIC CO., LTD. All Rights Reserved.

Mar.1.2026 Copyright 2026 HIROSE ELECTRIC CO., LTD. All Rights Reserved.

5-3 Inspection jig summary

Shape of electric inspection jig can be arrange as below.

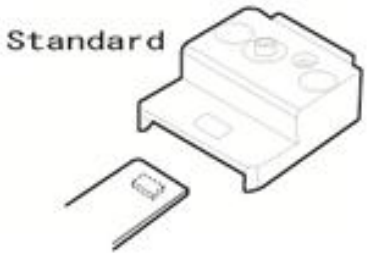

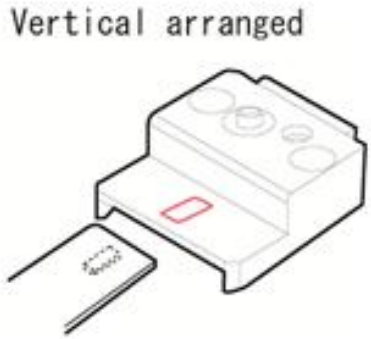

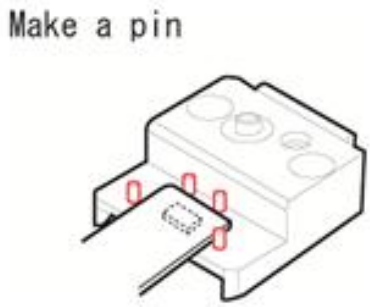

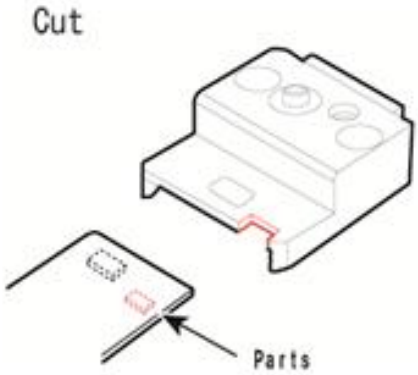

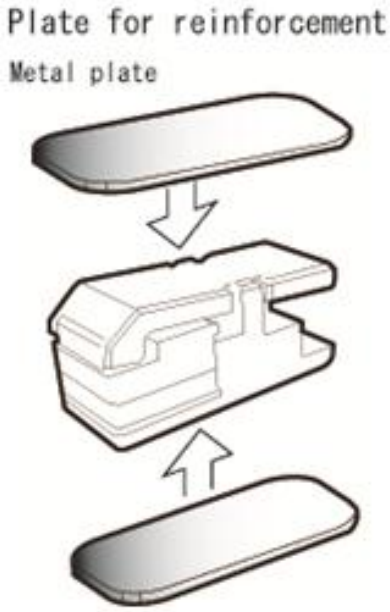

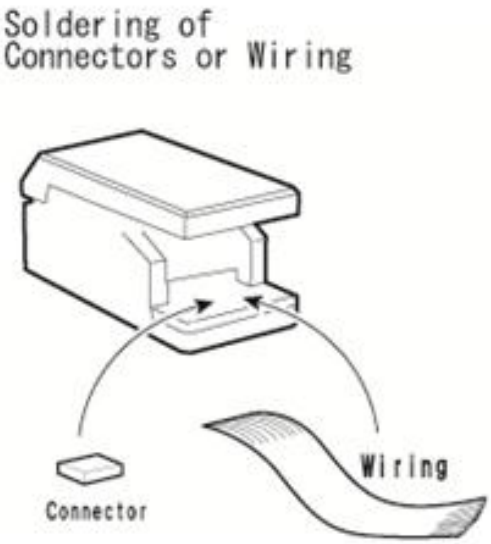

5-4 Contact information of YOKOWO CO.,LTD

Please contact to the following address for inquiry and information.

■Japan
COMPANY YOKOWO CO.,LTD
ADRESS 7-5-11 TAKINOGAWA, KITAKU, TOKYO, 114-8515, JAPAN
TEL 03-3916-3141
E-mail ds@jp.yokowo.com

■China
COMPANY DALIAN Y-TECH PARTS CO.,LTD.(Sales representative of YOKOWO CO.,LTD)
ADRESS 76#BEI CANG TUN LIANG JIA DIAN STREET FREE TRADE ZONE, DALIAN, CHINA
TEL 86-411-8728-1952 FAX: 86-411-8728-2953
E-mail yteci-dc@dan.wind.ne.jp

■Hong Kong
COMPANY YOKOWO CORP.(H.K.)Ltd.
ADRESS Unit 06-08A, 20F, China Hong Kong City,Tower3, 33Canton Road, Tsim Sha Tsui, Kowloon, Hong Kong
TEL 852-2368-4870 FAX：852-2366-3692
E-mail joice@yokowo-corp.com.hk, anna@yokowo-corp.com.hk

■Taiwan
COMPANY YOKOWO MICRO TECH CO.,LTD.
ADRESS 7F.-1, No104, Minquan West Road, Datong District, Taipei City 103, Taiwan, R.O.C.
TEL 886-2-2550-1522 FAX: 886-2-2550-8203
E-mail ymt@yokowo.com.tw

■Korea
COMPANY A-SUNG TECHNO Co.,Ltd.(Sales representative of YOKOWO CO ., LTD)
ADRESS 4F,A-sung B/D,Dogok-ro 462,Songpa-gu,Seoul,Korea
TEL 82-2-416-8390(ex.102) FAX:82-2-416-8392
E-mail kybae@asung.com

COMPANY TAIJOO TRADING CO.,INC.(Sales representative of YOKOWO CO ., LTD)
ADRESS RM.202 Mujige shopping center 1332-3, Seocho-dong, Seocho-ku Seoul, Korea (South) 137-859
Tel 82-2-3487-9080 Fax : 82-2-3474-3605
E-mail selct@naver.com

Mar.1.2026 Copyright 2026 HIROSE ELECTRIC CO., LTD. All Rights Reserved.