May.1.2026 Copyright 2026 HIROSE ELECTRIC CO., LTD. All Rights Reserved.
In case of consideration for using Automotive equipment / device which demand high reliability, kindly contact our sales window correspondents.

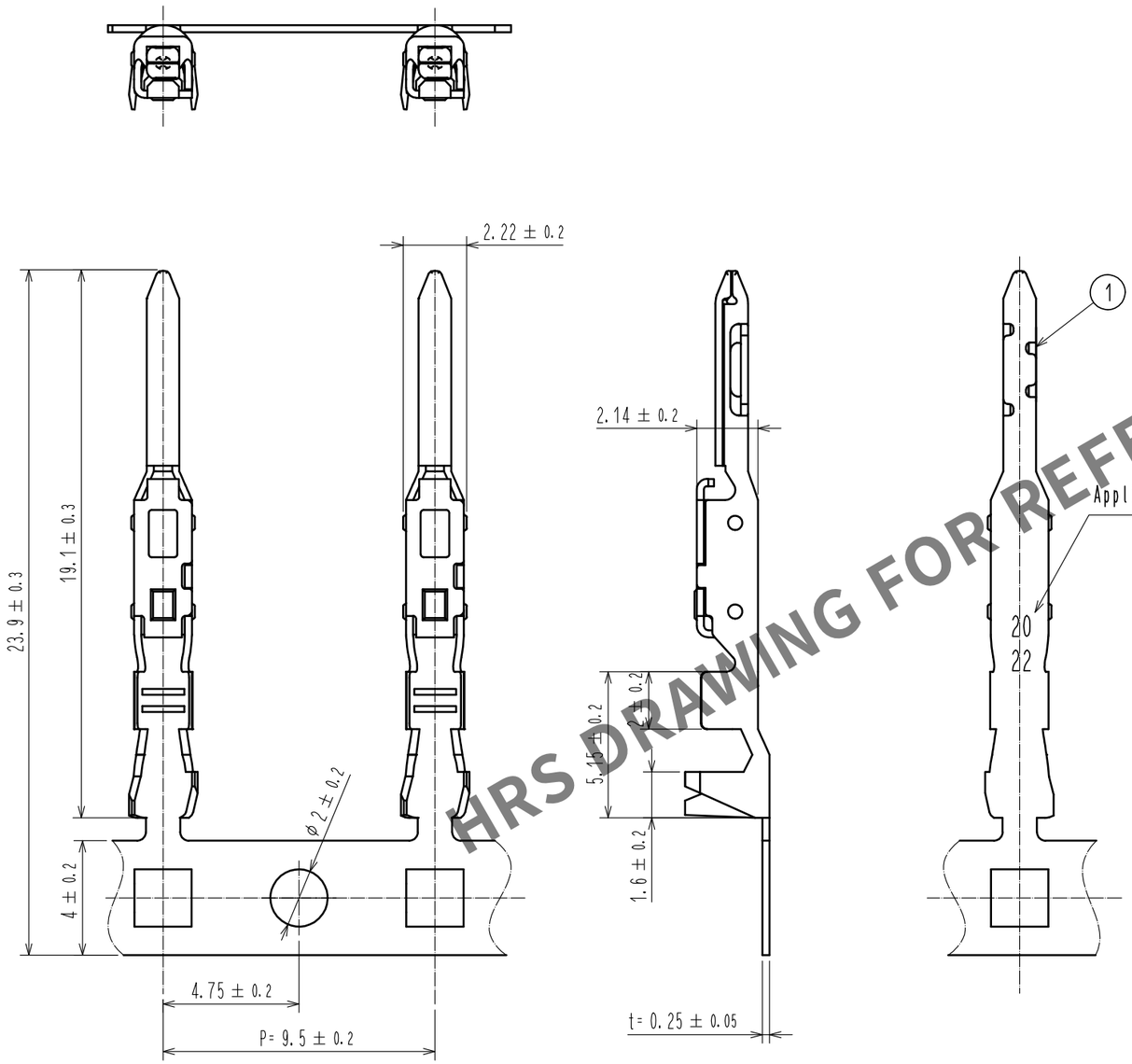

HRS DRAWING FOR REFERENCE

2 Reel style and dimensions

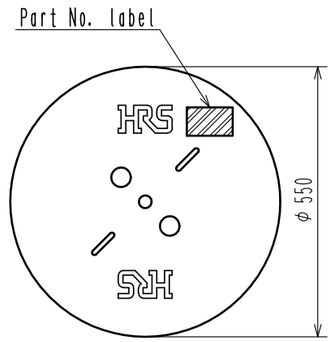

Detail of part No. label

HRS	Inspection
Code No.	CL680-0538-3
Part No.	DF63-2022PCF
Quantity	4000
Specification	
Lot No.	
Section	

Notes
1. 1RL : 4000 contacts.
2. Style of reel and box are shown in figure.
3. Up to 4 reels are packed up in one box.
4. Please be sure to check the form of crimping using a cable when you adjust applicator.
5. UL(File No.E52653)
   C-UL(File No.E52653)
   TUV (Certificate No.R50318850) authorization article.

NO.	MATERIAL	FINISH , REMARKS
1	Phosphor bronze	Tin plating : 1μm MIN

UNITS mm	SCALE 5 : 1	COUNT	DESCRIPTION OF REVISIONS	DESIGNED	CHECKED	DATE
		0				

HRS HIROSE ELECTRIC CO., LTD.

APPROVED	: KI. AKIYAMA	15. 10. 30	DRAWING NO.	EDC-362151-00-00
CHECKED	: TS. FUKUSHIMA	15. 10. 30	PART NO.	DF63-2022PCF
DESIGNED	: HT. SATO	15. 10. 30	CODE NO.	CL680-0538-3-00
DRAWN	: HT. SATO	15. 10. 30		0 1/1

FORM HC0011-5-7